EvacGo

Open-Area Conventional Wall Sounder

The EvacGo open-area conventional wall sounder can be used as either a standalone conventional device or as a loop-powered intelligent unit with the addition of our addressable sounder interface module (Axis-WSM).

The device is capable of reproducing 32 tones with a high sound output capability and four volume settings. These can be selected by a DIP switch at the back of the sounder body.

Standard and alternative tones are available for each setting which can be selected via the control panel programming when used with the intelligent interface (Axis-WSM) or wiring connections if used as a conventional standalone unit.

Low current consumption and compact design gives a wide-angle uniform sound distribution providing good audibility in all directions. The sounder is easy to install and incorporates built in short circuit loop isolation.

Features

- Flexible modular design
- Approved for outdoor use to EN54-3 (Type B)
- 32-tone settings
- Wide angle uniform sound distribution
- Weatherproof to IP65
- Easy to install
- High sound-output capability
- 4 adjustable volume settings
- Robust with high reliability
- Available in red (Axis-CWS) or white (Axis-CWS/W)

Dimensions

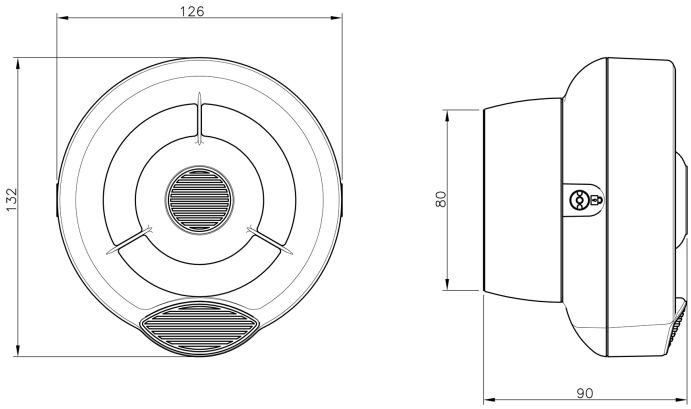

Standards and Approvals

- EN54-3:2001 +A1:2002 +A2:2006

Specification

Power supply (*)	15 to 40 Vdc
Alarm current consumption (volume set to HIGH and dependent upon tone selected)	5-8 mA
Audible frequency range (dependent upon tone selected)	440 Hz - 2900 Hz
Maximum sound output (volume set to HIGH)	100 dB(A) ±3 dB(A)
Operating temperature range (no icing)	-25°C to +70°C
Maximum humidity (non condensing)	95% RH
Depth (base)	90 mm (35mm)
Diameter	132 mm
Weight (base included)	270 g
IP rating*	21
IP rating (not certified)	65

(*) Independently assessed and certified to IPX5 (not part of the current EN54-3 certification)

Conventional Wall Sounder Volume Range

Specification	Min	Typical	Max	Units	Notes
Numbers of tones	-	32	-	-	
Sound output. HIGH volume	97	100	103	dB(A)	Tone 3
Sound output LOW volume	85	88	91	dB(A)	Tone 3
Operating frequency range	440	-	2900	Hz	

The four volume settings are roughly evenly spread between the Min and Max levels.

Order Codes and Options

AXIS-CWS	Open-area conventional wall sounder - Red
AXIS-CWS/W	Open-area conventional wall sounder - White
AXIS-WSM	Addressable sounder interface module

Advanced, The Bridges, Balliol Business Park, Newcastle upon Tyne, NE12 8EW, UK T: +44 (0)345 894 7000 E: enquiries@advancedco.com
W: www.advancedco.com

As our policy is one of constant product improvement the right is therefore reserved to modify product specifications without prior notice.